Standard model

model **CLT□-□**

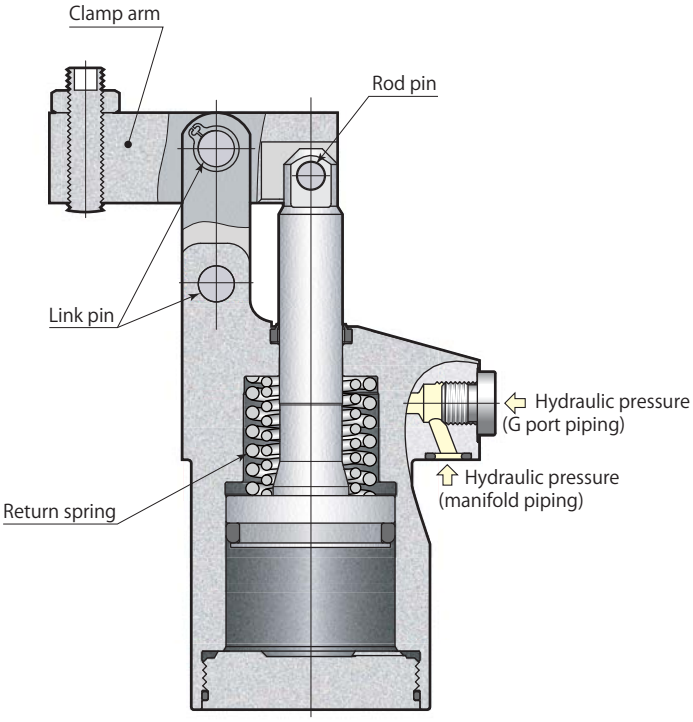

Hydraulic circuit diagram

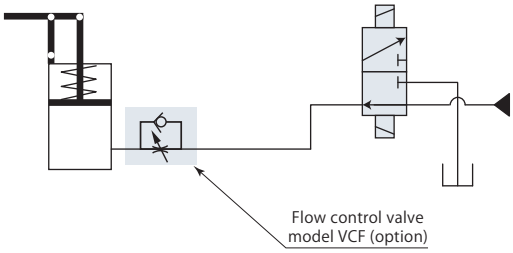

Use flow control valve for meter-in control.

Specifications page → 61
Standard page → 64

Specifications

Size

CLT 02 / 04 / 06 / 10 / 16 / 25* —

Clamp arm mounting direction

L : Left side

F : Front side

R : Right side

L:Left side F:Front side R:Right side

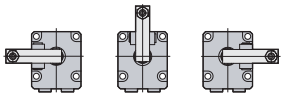

*:CLT25-L and CLT25-R are made to order.

Model			CLT02	CLT04	CLT06	CLT10	CLT16	CLT25
Cylinder force (hydraulic pressure 7MPa)*1		kN	3.2	4.5	6.1	9.8	15.7	25.4
Cylinder inner diameter		mm	25	30	35	44	56	70
Rod diameter		mm	12	14	14	16	22.4	28
Effective area (clamp)		cm^2	4.9	7.1	9.6	15.2	24.6	38.5
Full stroke		mm	20.5	23.5	26	29.5	36	45
Clamp stroke		mm	17.5	20.5	23	26.5	33	42
Safety stroke		mm	3	3	3	3	3	3
Max. oil flow rate		L/min	1.0	1.6	2.6	4.7	9.5	18.9
Cylinder capacity		cm^3	10.0	16.7	25.0	44.8	88.6	173.3
Return spring force	Clamp	kN	0.25	0.40	0.63	0.81	1.52	1.58
	Unclamp	kN	0.13	0.19	0.33	0.44	0.81	0.83
Recommended piping inner diameter*2		mm	ø6	ø6	ø6	ø8	ø8	ø10
Max. allowable mass of clamp arm*3		kg	0.2	0.3	0.5	1.0	1.5	3.0
Mass		kg	0.7	1.0	1.5	2.4	4.3	8.1
Recommended tightening torque of mounting screws*4		N·m	7	7	12	29	57	100

- Pressure range:2.5–7 MPa
- Proof pressure:10.5 MPa
- Operating temperature:0–70 ℃
- Fluid used:General mineral based hydraulic oil (ISO-VG32 equivalent)
- Seals are resistant to chlorine-based cutting fluid. (not thermal resistant specification)

*1:This is value for clamping position.

*2:Care must be taken when numerous clamps are used or when hydraulic piping is long.

*3:This is clamp arm mass when shape of clamp arm being described in Dimensions is retained but length only has been extended.

*4:ISO R898 class 12.9

Manifold piping and G port piping are available.

Manifold piping

When choosing manifold piping, a flow control valve (model VCF) and an air bleeding valve (model VCE) are mountable on the G ports of the clamp.

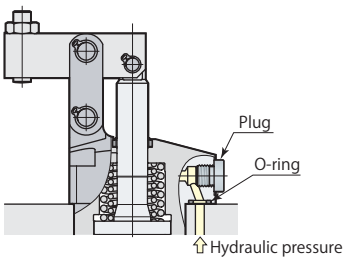

G port piping

Remove plug when choosing G port piping. (O-ring must be used.) Refer to **page →150** for details on G port piping flareless fitting. The flow control valve and the air bleeding valve should be installed in the middle of oil path.

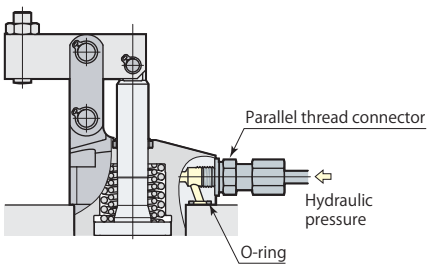

Performance diagram

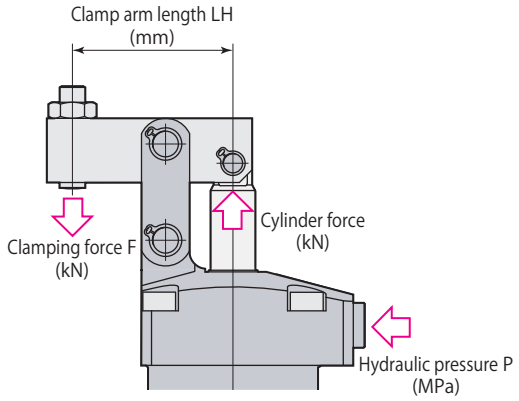

Clamping force varies depending on the clamp arm length (LH) and hydraulic pressure (P).

Clamping force calculation formula
F = (Coefficient 1 × P - Coefficient 2)/(LH - Coefficient 3)
F : Clamping force P : Hydraulic pressure LH : Clamp arm length

CLT06 with clamp arm length (LH) = 50 mm at hydraulic pressure of 7 MPa, Clamping force F is calculated by
(18.18×7-11.91)/(50-21.0)=4.0 kN

Do not use the clamp in the nonusable range. It may cause damage of link mechanism.

model CLT02

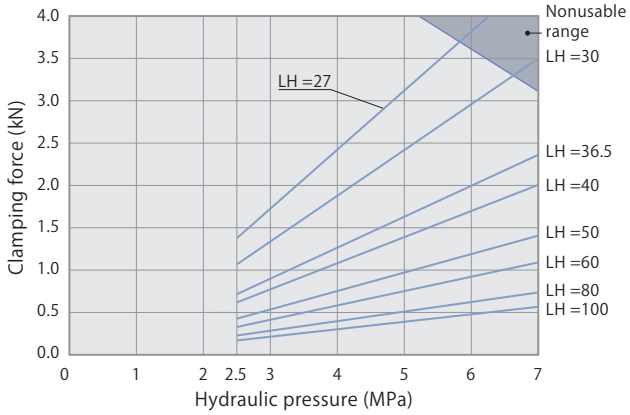

model CLT04

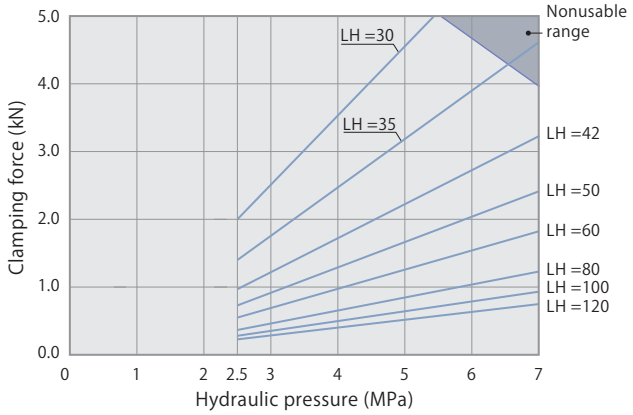

model CLT06

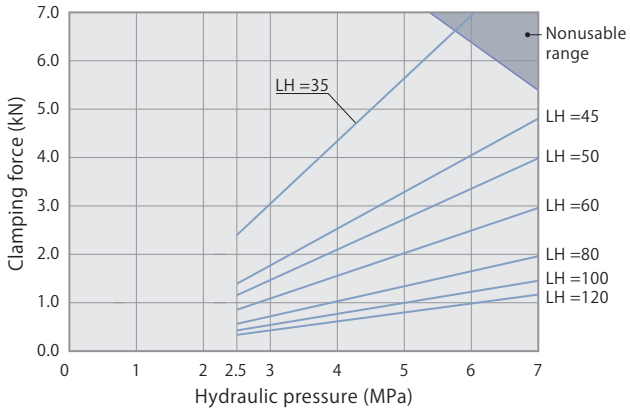

model CLT10

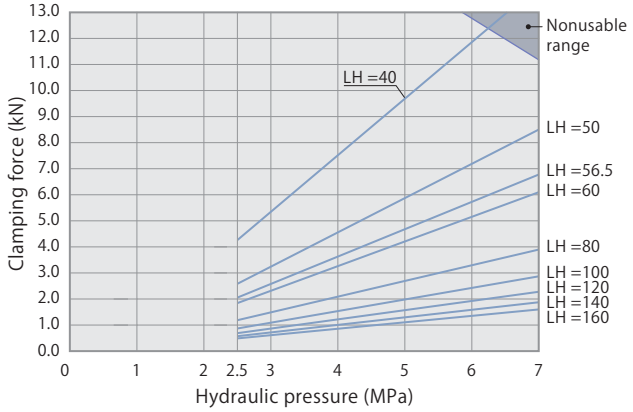

model CLT16

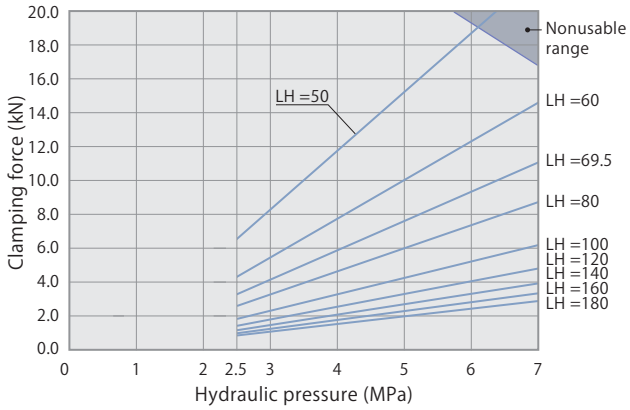

model CLT25

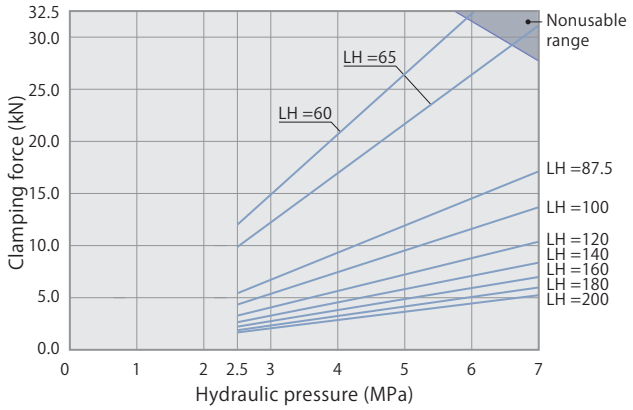

Performance table

model CLT02 Clamping force F=(7.29×P-3.71)/(LH-16.5)

Hydraulic pressure MPa	Cylinder force kN	Clamping force kN / Clamp arm length LH mm								Min. arm length Min. LH mm
		27	30	36.5	40	50	60	80	100	
7	3.2			2.4	2.0	1.4	1.1	0.7	0.6	32
6.5	2.9		3.2	2.2	1.9	1.3	1.0	0.7	0.5	30
6	2.7		3.0	2.0	1.7	1.2	0.9	0.6	0.5	28
5.5	2.4	3.5	2.7	1.8	1.5	1.1	0.8	0.6	0.4	26
5	2.2	3.1	2.4	1.6	1.4	1.0	0.8	0.5	0.4	25
4.5	2.0	2.8	2.2	1.5	1.2	0.9	0.7	0.5	0.3	24
4	1.7	2.4	1.9	1.3	1.1	0.8	0.6	0.4	0.3	↑
3.5	1.5	2.1	1.6	1.1	0.9	0.7	0.5	0.3	0.3	↑
3	1.2	1.7	1.3	0.9	0.8	0.5	0.4	0.3	0.2	↑
2.5	1.0	1.4	1.1	0.7	0.6	0.4	0.3	0.2	0.2	24
Max. pressure MPa		5.8	6.6	7.0	7.0	7.0	7.0	7.0	7.0	

indicates nonusable range

model CLT04 Clamping force F=(11.77×P-6.66)/(LH-18.5)

Hydraulic pressure MPa	Cylinder force kN	Clamping force kN / Clamp arm length LH mm								Min. arm length Min. LH mm
		30	35	42	50	60	80	100	120	
7	4.5			3.2	2.4	1.8	1.2	0.9	0.7	38
6.5	4.2		4.2	3.0	2.2	1.7	1.1	0.9	0.7	35
6	3.8		3.9	2.7	2.0	1.5	1.0	0.8	0.6	33
5.5	3.5		3.5	2.5	1.8	1.4	0.9	0.7	0.6	31
5	3.1	4.5	3.2	2.2	1.7	1.3	0.8	0.6	0.5	29
4.5	2.8	4.0	2.8	2.0	1.5	1.1	0.8	0.6	0.5	27
4	2.4	3.5	2.4	1.7	1.3	1.0	0.7	0.5	0.4	26
3.5	2.1	3.0	2.1	1.5	1.1	0.8	0.6	0.4	0.3	↑
3	1.7	2.5	1.7	1.2	0.9	0.7	0.5	0.4	0.3	↑
2.5	1.4	2.0	1.4	1.0	0.7	0.5	0.4	0.3	0.2	26
Max. pressure MPa		5.4	6.5	7.0	7.0	7.0	7.0	7.0	7.0	

indicates nonusable range

model CLT06 Clamping force F=(18.18×P-11.91)/(LH-21.0)

Hydraulic pressure MPa	Cylinder force kN	Clamping force kN / Clamp arm length LH mm							Min. arm length Min. LH mm
		35	45	50	60	80	100	120	
7	6.1		4.8	4.0	3.0	2.0	1.5	1.2	43
6.5	5.6		4.4	3.7	2.7	1.8	1.3	1.1	39
6	5.1		4.0	3.4	2.5	1.6	1.2	1.0	37
5.5	4.7	6.3	3.7	3.0	2.3	1.5	1.1	0.9	34
5	4.2	5.6	3.3	2.7	2.0	1.3	1.0	0.8	32
4.5	3.7	5.0	2.9	2.4	1.8	1.2	0.9	0.7	30
4	3.2	4.3	2.5	2.1	1.6	1.0	0.8	0.6	↑
3.5	2.7	3.7	2.2	1.8	1.3	0.9	0.7	0.5	↑
3	2.3	3.0	1.8	1.5	1.1	0.7	0.5	0.4	↑
2.5	1.8	2.4	1.4	1.2	0.9	0.6	0.4	0.3	30
Max. pressure MPa		5.7	7.0	7.0	7.0	7.0	7.0	7.0	

indicates nonusable range

model CLT10 Clamping force F=(33.54×P-17.86)/(LH-24.5)

Hydraulic pressure MPa	Cylinder force kN	Clamping force kN / Clamp arm length LH mm									Min. arm length Min. LH mm
		40	50	56.5	60	80	100	120	140	160	
7	9.8		8.5	6.8	6.1	3.9	2.9	2.3	1.9	1.6	44
6.5	9.1		7.8	6.3	5.6	3.6	2.7	2.1	1.7	1.5	42
6	8.3	11.8	7.2	5.7	5.2	3.3	2.4	1.9	1.6	1.4	39
5.5	7.6	10.7	6.5	5.2	4.7	3.0	2.2	1.7	1.4	1.2	37
5	6.8	9.7	5.9	4.7	4.2	2.7	2.0	1.6	1.3	1.1	36
4.5	6.0	8.6	5.2	4.2	3.7	2.4	1.8	1.4	1.2	1.0	↑
4	5.3	7.5	4.6	3.6	3.3	2.1	1.5	1.2	1.0	0.9	↑
3.5	4.5	6.4	3.9	3.1	2.8	1.8	1.3	1.0	0.9	0.7	↑
3	3.8	5.3	3.2	2.6	2.3	1.5	1.1	0.9	0.7	0.6	↑
2.5	3.0	4.3	2.6	2.1	1.9	1.2	0.9	0.7	0.6	0.5	36
Max. pressure MPa		6.2	7.0	7.0	7.0	7.0	7.0	7.0	7.0	7.0	

indicates nonusable range

model CLT16 Clamping force F=(67.61×P-41.72)/(LH-30.5)

Hydraulic pressure MPa	Cylinder force kN	Clamping force kN / Clamp arm length LH mm									Min. arm length Min. LH mm
		50	60	69.5	80	100	120	140	160	180	
7	15.7		14.6	11.1	8.7	6.2	4.8	3.9	3.3	2.9	57
6.5	14.5		13.5	10.2	8.0	5.7	4.4	3.6	3.1	2.7	53
6	13.3	18.7	12.3	9.3	7.4	5.2	4.1	3.3	2.8	2.4	50
5.5	12.0	16.9	11.2	8.5	6.7	4.8	3.7	3.0	2.5	2.2	47
5	10.8	15.2	10.0	7.6	6.0	4.3	3.3	2.7	2.3	2.0	45
4.5	9.6	13.5	8.9	6.7	5.3	3.8	2.9	2.4	2.0	1.8	44
4	8.3	11.7	7.8	5.9	4.6	3.3	2.6	2.1	1.8	1.5	↑
3.5	7.1	10.0	6.6	5.0	3.9	2.8	2.2	1.8	1.5	1.3	↑
3	5.9	8.3	5.5	4.1	3.3	2.3	1.8	1.5	1.2	1.1	↑
2.5	4.6	6.5	4.3	3.3	2.6	1.8	1.4	1.2	1.0	0.9	44
Max. pressure MPa		6.1	7.0	7.0	7.0	7.0	7.0	7.0	7.0	7.0	

indicates nonusable range

model CLT25 Clamping force F=(129.87×P-53.33)/(LH-37.5)

Hydraulic pressure MPa	Cylinder force kN	Clamping force kN / Clamp arm length LH mm									Min. arm length Min. LH mm
		60	65	87.5	100	120	140	160	180	200	
7	25.4			17.1	13.7	10.4	8.3	7.0	6.0	5.3	69
6.5	23.4		28.8	15.8	12.7	9.6	7.7	6.5	5.5	4.9	65
6	21.5		26.4	14.5	11.6	8.8	7.1	5.9	5.1	4.5	61
5.5	19.6	29.4	24.0	13.2	10.6	8.0	6.4	5.4	4.6	4.1	58
5	17.7	26.5	21.7	11.9	9.5	7.2	5.8	4.9	4.2	3.7	55
4.5	15.7	23.6	19.3	10.6	8.5	6.4	5.2	4.3	3.7	3.3	↑
4	13.8	20.7	17.0	9.3	7.5	5.7	4.5	3.8	3.3	2.9	↑
3.5	11.9	17.8	14.6	8.0	6.4	4.9	3.9	3.3	2.8	2.5	↑
3	10.0	14.9	12.2	6.7	5.4	4.1	3.3	2.7	2.4	2.1	↑
2.5	8.0	12.1	9.9	5.4	4.3	3.3	2.6	2.2	1.9	1.7	55
Max. pressure MPa		5.9	6.6	7.0	7.0	7.0	7.0	7.0	7.0	7.0	

indicates nonusable range

Dimensions

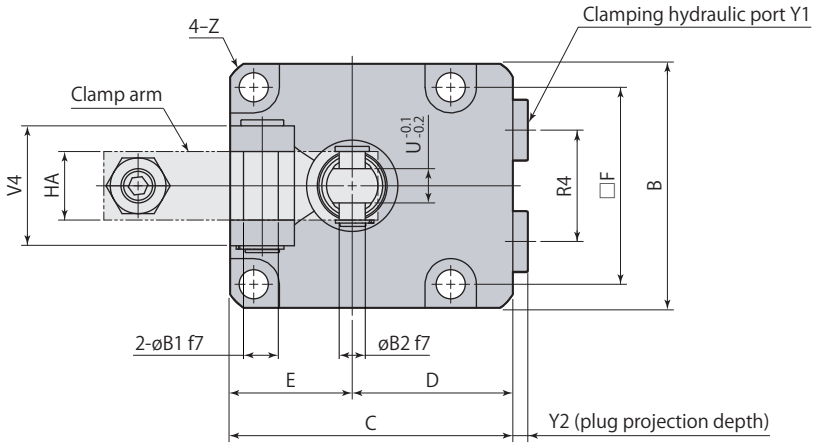

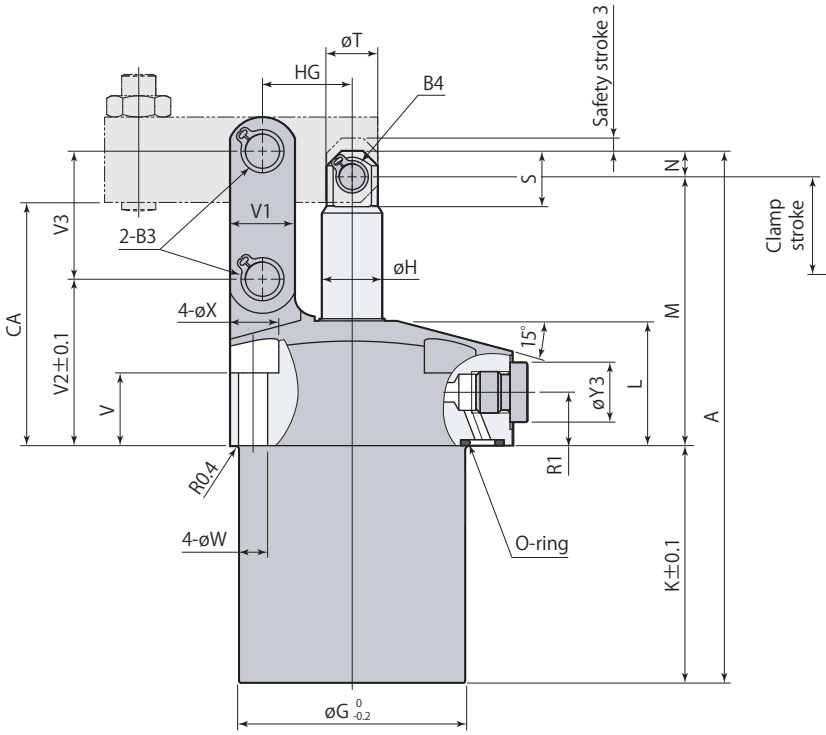

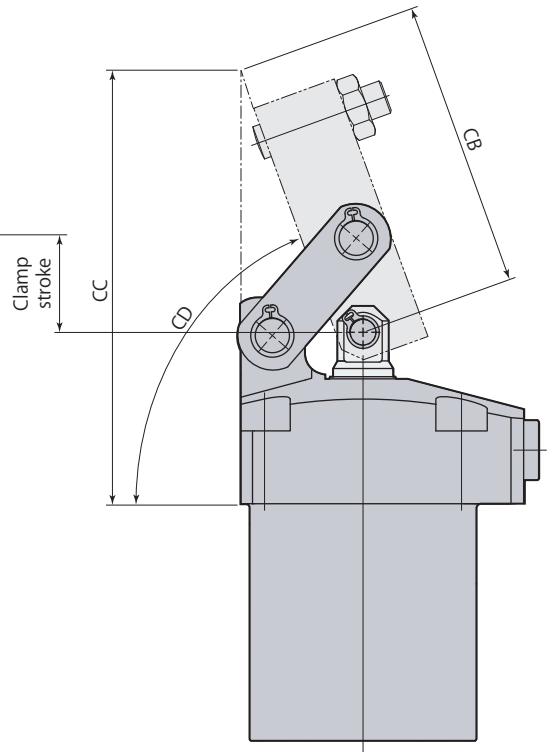

Clamp

Unclamp

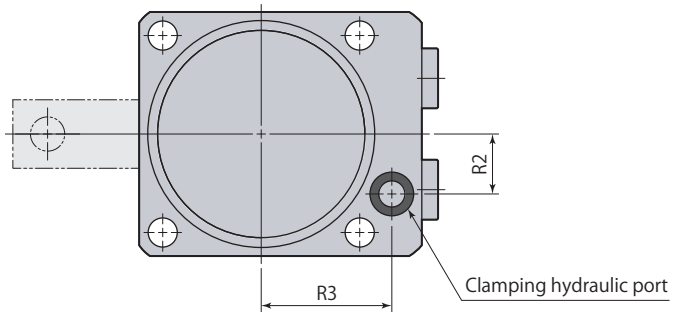

- This diagram represents external contour of CLT□-F. CLT□-L and CLT□-R differ only in terms of mounting direction of clamp arm and otherwise all dimensions are identical to those of CLT□-F.

L:Left side F:Front side R:Right side

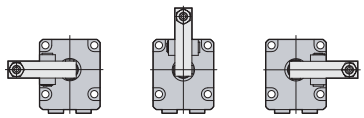

- Clamp arm and mounting screws are not included.

mm

Model	CLT02-□	CLT04-□	CLT06-□	CLT10-□	CLT16-□	CLT25-□
A	97.5	110	124.5	138	169	201.5
B	45	50	57	70	86	108
C	55	60	66	82	96	120
D	32.5	35	37.5	47	53	66
E	22.5	25	28.5	35	43	54
F	35	40	46	56	68	88
øG	39	47	53	63	78	100
øH	12	14	14	16	22.4	28
K	37.5	45.5	55.5	54	69	80
L	27.5	27.7	29.3	36.3	41.5	47
M	55	58.5	63	76	89	108.5
N	5	6	6	8	11	13
R1	12.5	12.5	12.5	14	14	21
R2	11	12	14	18	22.5	25
R3	25	28	30.5	36	42	57
R4	20	22	26	30	38	50
S	11.5	13	13	17	21.8	27.5
T	10	12	12	14	20	26
U (width across flats)	6	6	8	10	11	16
V	18	17	17	20	20	20
V1	11	13	15	19	25	32
V2	34	36	39	48	54.5	65
V3	24	26	30	35.5	44	53
V4	21	21	28	37	46	56
øW	5.5	5.5	6.8	9	11	14
øX	10	10	12	15	18.5	20
Y1	G1/8	G1/8	G1/8	G1/4	G1/4	G3/8
Y2	3.8	3.8	3.8	4.8	4.8	4.8
øY3	14	14	14	19	19	22
Z	C1.5	C2.5	C2.5	C3	C3.5	C5.5
øB1	$6^{-0.010}_{-0.022}$	$6^{-0.010}_{-0.022}$	$8^{-0.013}_{-0.028}$	$10^{-0.013}_{-0.028}$	$14^{-0.016}_{-0.034}$	$16^{-0.016}_{-0.034}$
øB2	$6^{-0.010}_{-0.022}$	$6^{-0.010}_{-0.022}$	$6^{-0.010}_{-0.022}$	$8^{-0.013}_{-0.028}$	$12^{-0.016}_{-0.034}$	$14^{-0.016}_{-0.034}$
B3 (snap ring)*1	STW-6	STW-6	STW-8	STW-10	STW-14	STW-16
B4 (snap ring)*1	STW-6	STW-6	STW-6	STW-8	STW-12	STW-14
CA	49.5	52.5	57	68	80	96
CB	48	59.6	67.3	78.7	98.2	133.5
CC	80.2	92.5	101.3	120.4	144.7	189.2
CD	About 69°	About 71°	About 70°	About 70°	About 69°	About 72°
HA	12	12	16	19	22	32
HG	16.5	18.5	21	24.5	30.5	37.5
O-ring (fluorocarbon hardness Hs90)	P7	P7	P7	P8	P8	P10
Flow control valve (meter-in)*2	VCF01	VCF01	VCF01	VCF02	VCF02	VCF03
Air bleeding valve*2	VCE01	VCE01	VCE01	VCE02	VCE02	VCE03

*1: Snap ring is made by Ochiai Corporation.

*2: Select the right model of VCF and VCE according to the size of the clamp.

Refer to each page for the details of options. ● Flow control valve **page →70** ● Air bleeding valve **page →72**

Mounting details

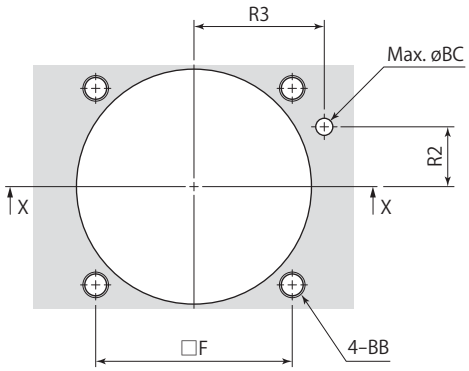

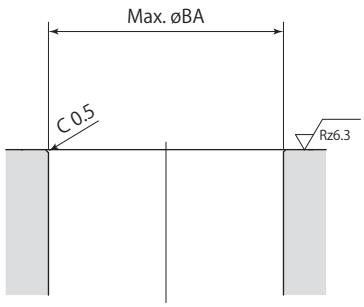

X-X

Rz: ISO4287(1997)

mm

Model	CLT02-□	CLT04-□	CLT06-□	CLT10-□	CLT16-□	CLT25-□
F	35	40	46	56	68	88
R2	11	12	14	18	22.5	25
R3	25	28	30.5	36	42	57
øBA	40	48	54	64	79	101
BB	M5	M5	M6	M8	M10	M12
øBC	4	4	4	6	6	8

Clamp arm mounting details

Clamp arm is not included. Manufacture a clamp arm with the dimensions shown in the table below.

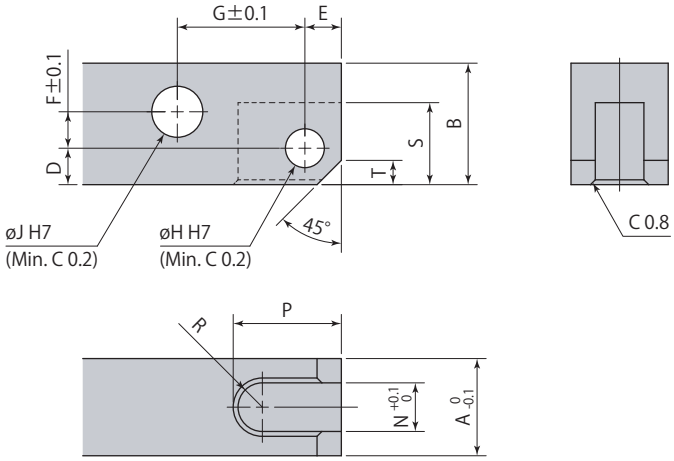

Recommended material：S45C (HB167–229)

mm

Link clamp	CLT02	CLT04	CLT06	CLT10	CLT16	CLT25
A	12	12	16	19	22	32
B	14	16	20	25	31	38
D	5.5	6	6	8	9	12.5
E	5.5	6	6	7	10	13
F	3	3.5	6	7.5	9.5	9.5
G	16.5	18.5	21	24.5	30.5	37.5
øH	$6^{+0.012}_{0}$	$6^{+0.012}_{0}$	$6^{+0.012}_{0}$	$8^{+0.015}_{0}$	$12^{+0.018}_{0}$	$14^{+0.018}_{0}$
øJ	$6^{+0.012}_{0}$	$6^{+0.012}_{0}$	$8^{+0.015}_{0}$	$10^{+0.015}_{0}$	$14^{+0.018}_{0}$	$16^{+0.018}_{0}$
N	6	6	8	10	11	16
P	14	17	17	20	26.5	36
R	R3	R3	R4	R5	R5.5	R8
S	12	13.5	13.5	17.5	22	28
T	3	4	4	5	7	8

● When mounting the clamp arm, use included pins and snap rings.

Clamp arm allowable eccentricity

An eccentric shape clamp arm, as shown in diagram on right can be used with link clamp model CLT, if it is not possible to set clamping point at tip section of clamp arm in alignment with center line of piston rod and clamp arm.
Amount of eccentricity, however, must be within allowable eccentricity shown below.
Using a clamp arm that exceeds allowable eccentricity results in significant eccentric load on link mechanism and piston rod, leading to malfunction.

Eccentric shape clamp arm

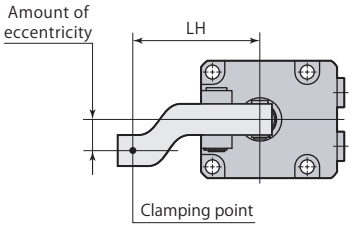

Ordinary clamp arm

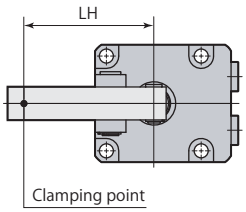

model CLT02 (indicates nonusable range)

Hydraulic pressure MPa	Allowable eccentricity mm, Clamp arm length LH mm							
	27	30	36.5	40	50	60	80	100
7			18	23	38	52	60	60
6.5		11	21	27	43	58	↑	↑
6		13	24	30	48	60	↑	↑
5.5	10	16	28	35	55	↑	↑	↑
5	12	19	33	41	60	↑	↑	↑
4.5	15	23	39	48	↑	↑	↑	↑
4	20	28	47	57	↑	↑	↑	↑
3.5	25	35	58	60	↑	↑	↑	↑
3	33	45	60	↑	↑	↑	↑	↑
2.5	44	60	60	60	60	60	60	60

model CLT04 (indicates nonusable range)

Hydraulic pressure MPa	Allowable eccentricity mm, Clamp arm length LH mm							
	30	35	42	50	60	80	100	120
7			9	16	24	41	58	60
6.5		6	11	19	28	47	60	↑
6		6	14	22	32	53	↑	↑
5.5		8	16	26	38	60	↑	↑
5	6	11	20	31	44	↑	↑	↑
4.5	6	14	25	37	52	↑	↑	↑
4	9	18	31	45	60	↑	↑	↑
3.5	13	24	39	55	↑	↑	↑	↑
3	19	32	50	60	↑	↑	↑	↑
2.5	27	44	60	60	60	60	60	60

model CLT06 (indicates nonusable range)

Hydraulic pressure MPa	Allowable eccentricity mm, Clamp arm length LH mm						
	35	45	50	60	80	100	120
7		9	9	10	11	12	13
6.5		14	15	18	23	28	25
6		19	22	27	37	47	33
5.5	12	26	30	38	54	70	57
5	16	35	41	52	75	80	80
4.5	20	45	54	70	80	↑	↑
4	26	55	69	80	↑	↑	↑
3.5	33	68	80	↑	↑	↑	↑
3	44	80	↑	↑	↑	↑	↑
2.5	61	80	80	80	80	80	80

model CLT10 (indicates nonusable range)

Hydraulic pressure MPa	Allowable eccentricity mm, Clamp arm length LH mm								
	40	50	56.5	60	80	100	120	140	160
7		15	24	26	36	46	56	65	75
6.5		18	28	33	51	66	81	95	95
6	9	22	33	38	68	90	95	↑	↑
5.5	9	27	39	45	81	95	↑	↑	↑
5	13	33	46	53	94	↑	↑	↑	↑
4.5	17	40	55	63	95	↑	↑	↑	↑
4	23	50	67	76	↑	↑	↑	↑	↑
3.5	30	62	83	94	↑	↑	↑	↑	↑
3	41	80	95	95	↑	↑	↑	↑	↑
2.5	57	95	95	95	95	95	95	95	95

model CLT16 (indicates nonusable range)

Hydraulic pressure MPa	Allowable eccentricity mm, Clamp arm length LH mm								
	50	60	69.5	80	100	120	140	160	180
7		13	24	37	61	85	110	110	110
6.5		18	32	47	75	103	↑	↑	↑
6	11	25	41	58	91	110	↑	↑	↑
5.5	14	34	52	72	110	↑	↑	↑	↑
5	21	44	66	90	↑	↑	↑	↑	↑
4.5	30	57	83	110	↑	↑	↑	↑	↑
4	41	74	105	↑	↑	↑	↑	↑	↑
3.5	56	96	110	↑	↑	↑	↑	↑	↑
3	77	110	↑	↑	↑	↑	↑	↑	↑
2.5	109	110	110	110	110	110	110	110	110

model CLT25 (indicates nonusable range)

Hydraulic pressure MPa	Allowable eccentricity mm, Clamp arm length LH mm								
	60	65	87.5	100	120	140	160	180	200
7			46	65	95	125	155	160	160
6.5		17	54	74	107	140	160	↑	↑
6		21	62	85	121	158	↑	↑	↑
5.5	17	27	73	98	138	160	↑	↑	↑
5	23	34	85	113	159	↑	↑	↑	↑
4.5	30	43	101	133	160	↑	↑	↑	↑
4	39	54	121	158	↑	↑	↑	↑	↑
3.5	50	68	147	160	↑	↑	↑	↑	↑
3	67	88	160	↑	↑	↑	↑	↑	↑
2.5	91	118	160	160	160	160	160	160	160