Standard model

model **CTT□-□**

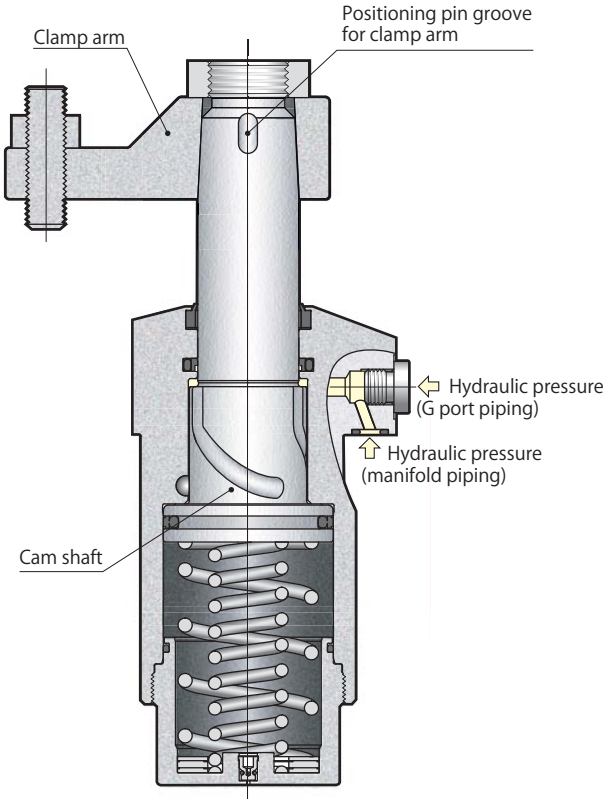

Hydraulic circuit diagram

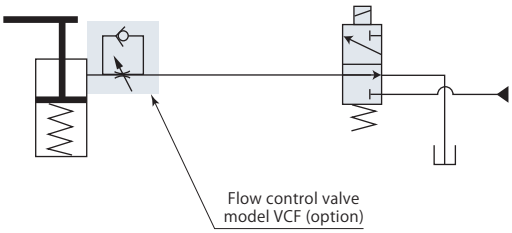

Use flow control valve for meter-in control.

Specifications page → 23
Standard page → 26
Pin rod page → 29
Swing angle 30°, 45°, 60° page → 30

Specifications

CTT — Size: 01, 02, 04, 06, 10, 16, 25

Swing direction (when clamping)

- L : Counter-clockwise
- R : Clockwise

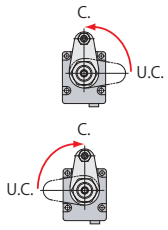

Variation code*

- (Nil) : Standard
- P : Pin rod
- N□ : Swing angle 30°, 45°, 60°

indicates made to order.

*: Contact Pascal for the details of variation codes (models) that are not described in the catalog.

Model			CTT01	CTT02	CTT04	CTT06	CTT10	CTT16	CTT25
Cylinder force (hydraulic pressure 7MPa)*1		kN	2.0	2.4	3.4	5.1	8.1	13.3	20.5
Cylinder inner diameter		mm	25	29	36	42	52	65	82
Rod diameter		mm	14	18	22.4	25	30	35.5	45
Effective area (clamp)		cm^2	3.4	4.1	6.2	8.9	14.2	23.3	36.9
Swing angle			90° ±3°						
Positioning pin groove position accuracy			±1°						
Repeated clamp positioning accuracy			±0.5°						
Full stroke		mm	16	18	20.5	23.5	26.5	28.5	36
90°swing stroke		mm	8	10	12.5	13.5	16.5	18.5	23
Clamp stroke		mm	8	8	8	10	10	10	13
Max. swing torque*2		N·m	0.15	0.2	0.6	1.0	1.8	3.6	5.4
Cylinder capacity (clamp)		cm^3	5.4	7.3	12.8	21.0	37.5	66.4	132.9
Return spring force	Unclamp	kN	0.23	0.29	0.50	0.74	1.13	1.79	2.92
	Clamp stroke central position	kN	0.37	0.47	0.94	1.12	1.79	2.99	5.32
	Clamp end	kN	0.42	0.52	1.05	1.22	1.94	3.25	5.85
Recommended piping inner diameter*3		mm	ø6	ø6	ø6	ø6	ø8	ø8	ø10
Mass		kg	0.7	1.0	1.5	2.0	3.3	5.5	10.4
Recommended tightening torque of mounting screws*4		N·m	3.5	7	7	12	29	57	77
Recommended tightening torque of nut		N·m	12	26	51	60	86	120	180

- Pressure range: 2.5–7 MPa
- Proof pressure: 10.5 MPa
- Operating temperature: 0–70 ℃
- Fluid used: General mineral based hydraulic oil (ISO-VG32 equivalent)
- Seals are resistant to chlorine-based cutting fluid. (not thermal resistant specification)

*1: This is value for central position of clamp stroke.

*2: This is the limit value for lifting arm with spring force (unclamp) when mounted vertically.

*3: Care must be taken when numerous clamps are used or when hydraulic piping is long.

*4: ISO R898 class 12.9

Manifold piping and G port piping are available.

Manifold piping

When choosing manifold piping, a flow control valve (model VCF) and an air bleeding valve (model VCE) are mountable on the G ports of the clamp.

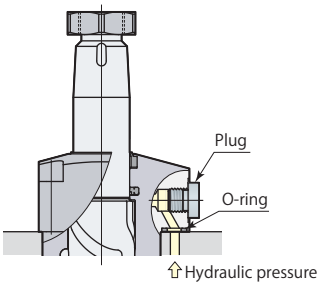

G port piping

Remove plug when choosing G port piping. (O-ring must be used.) Refer to **page →150** for details on G port piping flareless fitting. The flow control valve and the air bleeding valve should be installed in the middle of oil path.

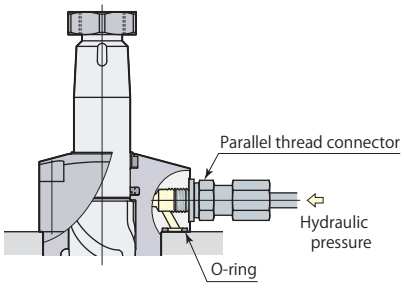

Performance table

Clamping force varies depending on the clamp arm length (LH) and hydraulic pressure (P).

Clamping force calculation formula
F = (P - Coefficient 1)/(Coefficient 2 + Coefficient 3 × LH)
F: Clamping force P: Hydraulic pressure LH: Clamp arm length

CTT06 with clamp arm length (LH) = 60 mm
at hydraulic pressure of 7 MPa,
Clamping force F is calculated by
(7-1.25)/(1.12+0.00422×60)=4.2 kN

Do not use the clamp in the nonusable range.
It may cause damage to the cylinder and rod.

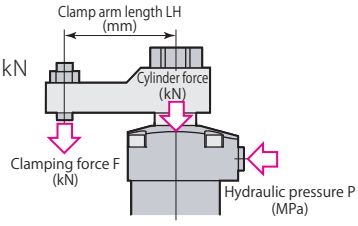

model CTT01 Clamping force F=(P-1.10)/(2.97+0.0153×LH)

Hydraulic pressure MPa	Cylinder force kN	Clamping force kN / Clamp arm length LH mm 30	35	40	50	60	80	100	120	Max. arm length Max. LH mm
7	2.0	1.7	1.7	1.6						49
6.5	1.8	1.6	1.5	1.5	1.4		Nonusable range			55
6	1.6	1.4	1.4	1.4	1.3	1.3				62
5.5	1.5	1.3	1.3	1.2	1.2	1.1				73
5	1.3	1.1	1.1	1.1	1.0	1.0	0.9			87
4.5	1.1	1.0	1.0	0.9	0.9	0.9	0.8	0.8		107
4	1.0	0.8	0.8	0.8	0.8	0.7	0.7	0.6	0.6	139
3.5	0.8	0.7	0.7	0.7	0.6	0.6	0.6	0.5	0.5	↑
3	0.6	0.6	0.5	0.5	0.5	0.5	0.5	0.4	0.4	↑
2.5	0.5	0.4	0.4	0.4	0.4	0.4	0.3	0.3	0.3	139

model CTT02 Clamping force F=(P-1.16)/(2.46+0.0116×LH)

Hydraulic pressure MPa	Cylinder force kN	Clamping force kN / Clamp arm length LH mm 35	40	50	60	80	100	120	140	Max. arm length Max. LH mm
7	2.4	2.0	2.0	1.9	1.9		Nonusable range			78
6.5	2.2	1.9	1.8	1.8	1.7	1.6				89
6	2.0	1.7	1.7	1.6	1.5	1.4	1.3			104
5.5	1.8	1.5	1.5	1.4	1.4	1.3	1.2	1.1		123
5	1.6	1.3	1.3	1.3	1.2	1.1	1.1	1.0	0.9	152
4.5	1.4	1.2	1.1	1.1	1.1	1.0	0.9	0.9	0.8	↑
4	1.2	1.0	1.0	0.9	0.9	0.8	0.8	0.7	0.7	↑
3.5	1.0	0.8	0.8	0.8	0.7	0.7	0.6	0.6	0.6	↑
3	0.7	0.6	0.6	0.6	0.6	0.5	0.5	0.5	0.5	↑
2.5	0.5	0.5	0.5	0.4	0.4	0.4	0.4	0.3	0.3	152

model CTT04 Clamping force F=(P-1.51)/(1.60+0.00664×LH)

Hydraulic pressure MPa	Cylinder force kN	Clamping force kN / Clamp arm length LH mm 40	50	60	80	100	120	140	160	Max. arm length Max. LH mm
7	3.4	2.9	2.8	2.7	2.6	2.4	Nonusable range			116
6.5	3.1	2.7	2.6	2.5	2.3	2.2	2.1			135
6	2.8	2.4	2.3	2.2	2.1	2.0	1.9	1.8	1.7	161
5.5	2.5	2.1	2.1	2.0	1.9	1.8	1.7	1.6	1.5	199
5	2.2	1.9	1.8	1.7	1.6	1.5	1.5	1.4	1.3	↑
4.5	1.9	1.6	1.5	1.5	1.4	1.3	1.2	1.2	1.1	↑
4	1.6	1.3	1.3	1.2	1.2	1.1	1.0	1.0	0.9	↑
3.5	1.2	1.1	1.0	1.0	0.9	0.9	0.8	0.8	0.7	↑
3	0.9	0.8	0.8	0.7	0.7	0.7	0.6	0.6	0.6	↑
2.5	0.6	0.5	0.5	0.5	0.5	0.4	0.4	0.4	0.4	199

model CTT06 Clamping force F=(P-1.25)/(1.12+0.00422×LH)

Hydraulic pressure MPa	Cylinder force kN	Clamping force kN / Clamp arm length LH mm 50	60	80	100	120	140	160	180	Max. arm length Max. LH mm
7	5.1	4.3	4.2	3.9	3.7		Nonusable range			111
6.5	4.7	3.9	3.8	3.6	3.4	3.2				127
6	4.2	3.6	3.5	3.3	3.1	2.9	2.8			149
5.5	3.8	3.2	3.1	2.9	2.8	2.6	2.5	2.4	2.3	180
5	3.3	2.8	2.7	2.6	2.4	2.3	2.2	2.1	2.0	226
4.5	2.9	2.4	2.4	2.2	2.1	2.0	1.9	1.8	1.7	↑
4	2.5	2.1	2.0	1.9	1.8	1.7	1.6	1.5	1.5	↑
3.5	2.0	1.7	1.6	1.5	1.5	1.4	1.3	1.3	1.2	↑
3	1.6	1.3	1.3	1.2	1.1	1.1	1.0	1.0	0.9	↑
2.5	1.1	0.9	0.9	0.9	0.8	0.8	0.7	0.7	0.7	226

model CTT10 Clamping force F=(P-1.26)/(0.706+0.00228×LH)

Hydraulic pressure MPa	Cylinder force kN	Clamping force kN / Clamp arm length LH mm 60	80	100	120	140	160	180	200	Max. arm length Max. LH mm
7	8.1	6.8	6.5	6.1	5.9		Nonusable range			135
6.5	7.4	6.2	5.9	5.6	5.3	5.1				155
6	6.7	5.6	5.3	5.1	4.8	4.6	4.4	4.2		182
5.5	6.0	5.0	4.8	4.5	4.3	4.1	4.0	3.8	3.6	221
5	5.3	4.4	4.2	4.0	3.8	3.6	3.5	3.4	3.2	↑
4.5	4.6	3.8	3.6	3.5	3.3	3.2	3.0	2.9	2.8	↑
4	3.9	3.3	3.1	2.9	2.8	2.7	2.6	2.5	2.4	↑
3.5	3.2	2.7	2.5	2.4	2.3	2.2	2.1	2.0	1.9	↑
3	2.5	2.1	2.0	1.9	1.8	1.7	1.6	1.6	1.5	↑
2.5	1.8	1.5	1.4	1.3	1.3	1.2	1.2	1.1	1.1	221

model CTT16 Clamping force F=(P-1.28)/(0.429+0.00128×LH)

Hydraulic pressure MPa	Cylinder force kN	Clamping force kN / Clamp arm length LH mm 70	80	100	120	140	160	180	200	Max. arm length Max. LH mm
7	13.3	11.0	10.8	10.3	9.8		Nonusable range			132
6.5	12.2	10.1	9.8	9.4	9.0	8.6				151
6	11.0	9.1	8.9	8.5	8.1	7.8	7.4			176
5.5	9.8	8.1	7.9	7.6	7.2	6.9	6.7	6.4	6.2	212
5	8.7	7.2	7.0	6.7	6.4	6.1	5.9	5.6	5.4	264
4.5	7.5	6.2	6.1	5.8	5.5	5.3	5.1	4.9	4.7	↑
4	6.3	5.2	5.1	4.9	4.7	4.5	4.3	4.1	4.0	↑
3.5	5.2	4.3	4.2	4.0	3.8	3.7	3.5	3.4	3.2	↑
3	4.0	3.3	3.2	3.1	3.0	2.8	2.7	2.6	2.5	↑
2.5	2.8	2.4	2.3	2.2	2.1	2.0	1.9	1.9	1.8	264

model CTT25 Clamping force F=(P-1.44)/(0.271+0.000658×LH)

Hydraulic pressure MPa	Cylinder force kN	Clamping force kN / Clamp arm length LH mm 90	100	120	140	160	180	200	240	Max. arm length Max. LH mm
7	20.5	16.8	16.5	15.9	15.3	14.8	14.3	Nonusable range		180
6.5	18.7	15.3	15.0	14.5	13.9	13.4	13.0	12.6		208
6	16.8	13.8	13.5	13.0	12.6	12.1	11.7	11.3	10.6	246
5.5	15.0	12.3	12.1	11.6	11.2	10.8	10.4	10.1	9.5	300
5	13.1	10.8	10.6	10.2	9.8	9.5	9.1	8.8	8.3	↑
4.5	11.3	9.3	9.1	8.7	8.4	8.1	7.9	7.6	7.1	↑
4	9.4	7.8	7.6	7.3	7.1	6.8	6.6	6.4	6.0	↑
3.5	7.6	6.2	6.1	5.9	5.7	5.5	5.3	5.1	4.8	↑
3	5.8	4.7	4.6	4.5	4.3	4.1	4.0	3.9	3.6	↑
2.5	3.9	3.2	3.1	3.0	2.9	2.8	2.7	2.6	2.5	300

● See the formula shown on **page →29** for clamping force calculation when pin rod type (CTT□-□P) is selected.

Swing speed adjustment

Swing time is restricted by the mass and length of the clamp arm (moment of inertia) since the 90° swing action impacts the cam shaft.

1.Calculate the moment of inertia according to the arm length and mass.

2.Adjust swing speed with flow control valve to ensure that 90° swing time of the clamp arm is greater than the shortest swing time in the graph shown below.

● The cam groove may be damaged in case the swing speed is set at the nonusable range in the graph.

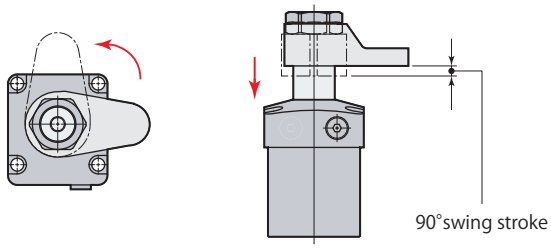

Example of calculation for moment of inertia

$$I = \frac{1}{12} m_1(4A_1^2+B^2)+\frac{1}{12} m_2(4A_2^2+B^2)$$

I : Moment of inertia (kg·m²)

m: Mass (kg)

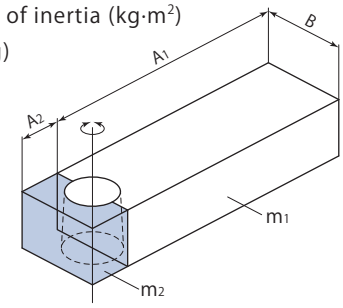

model CTT01

Shortest swing time calculation formula $t=\sqrt{\frac{I}{0.0270}}$

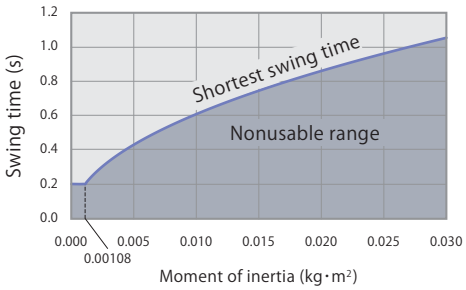

model CTT02

Shortest swing time calculation formula $t=\sqrt{\frac{I}{0.0305}}$

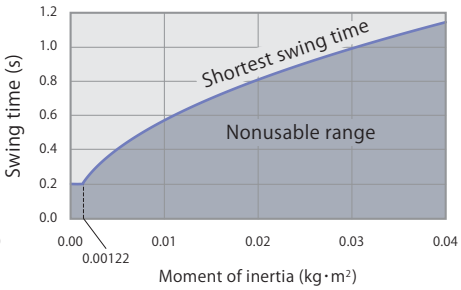

model CTT04

Shortest swing time calculation formula $t=\sqrt{\frac{I}{0.0668}}$

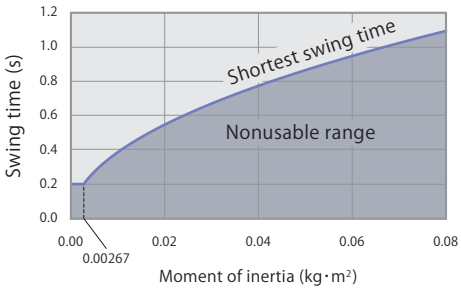

model CTT06

Shortest swing time calculation formula $t=\sqrt{\frac{I}{0.0730}}$

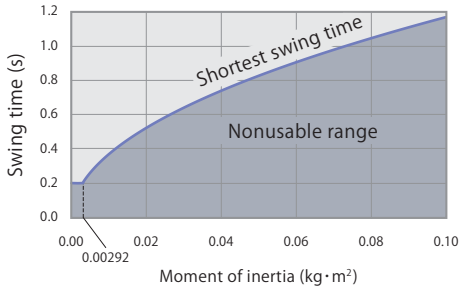

model CTT10

Shortest swing time calculation formula $t=\sqrt{\frac{I}{0.141}}$

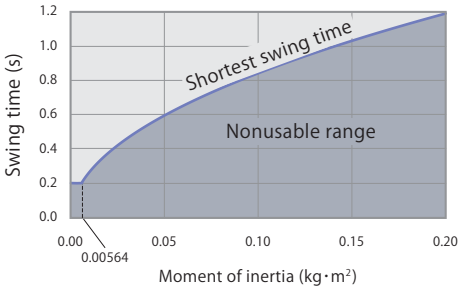

model CTT16

Shortest swing time calculation formula $t=\sqrt{\frac{I}{0.233}}$

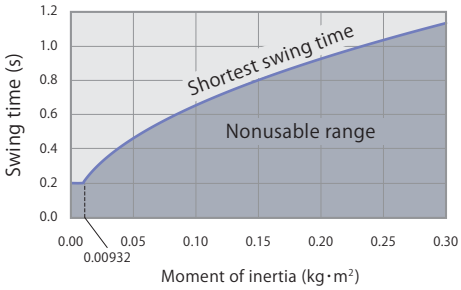

model CTT25

Shortest swing time calculation formula $t=\sqrt{\frac{I}{0.389}}$

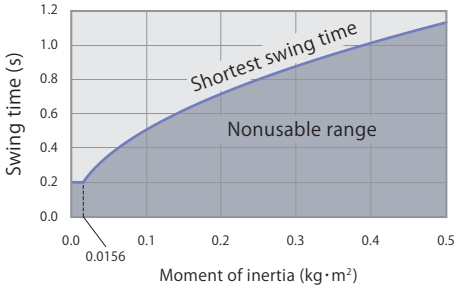

CTT□-□	Single acting Swing clamp Standard model	7MPa Single acting

Dimensions

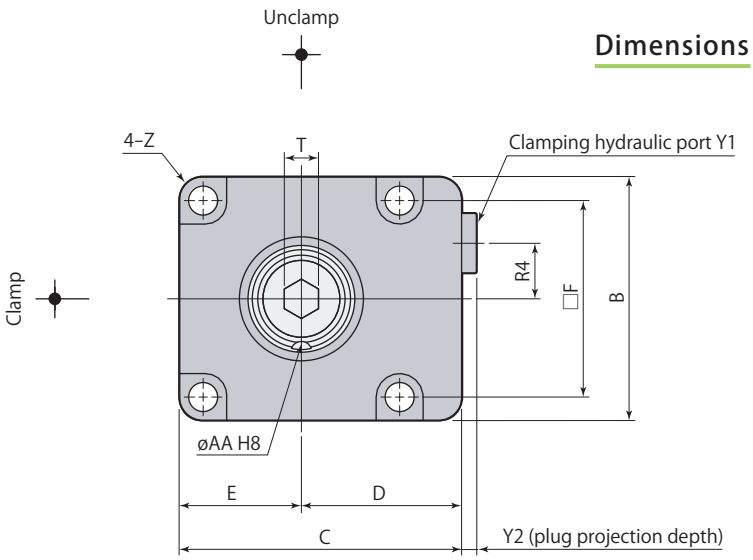

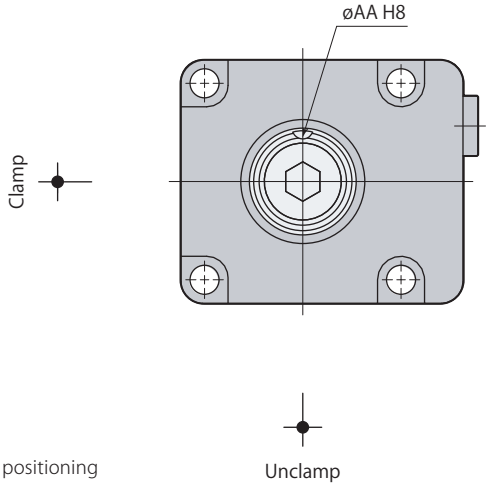

This diagram indicates the arm positioning pin groove at unclamped condition.

Swing direction L (counter-clockwise)

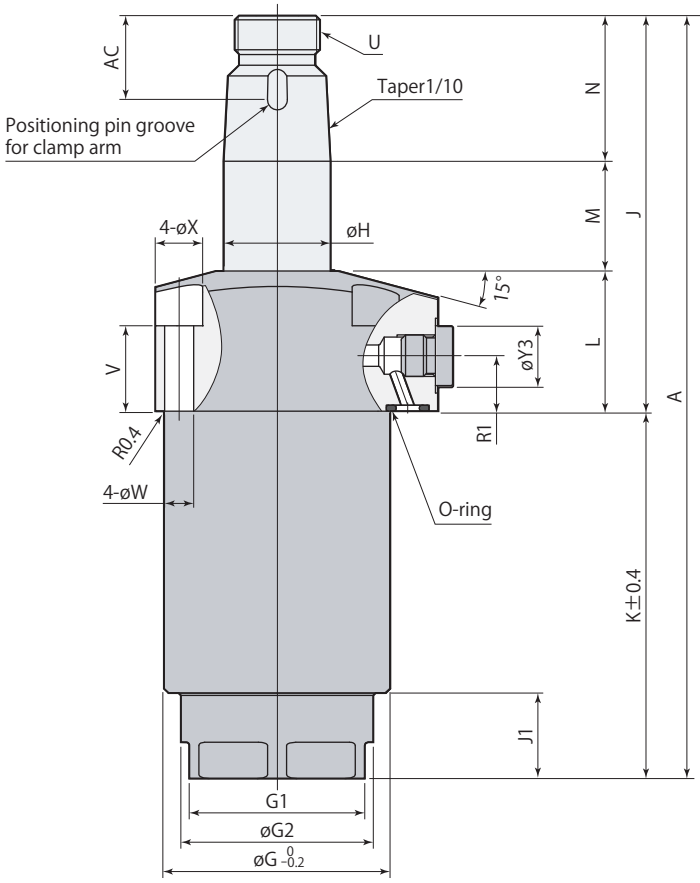

Swing direction R (clockwise)

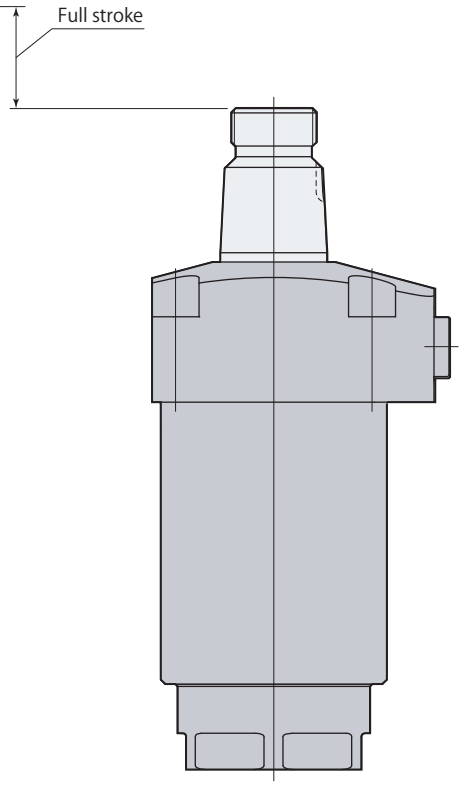

Unclamp

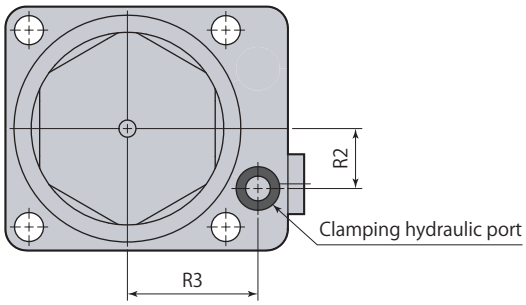

Stroke end

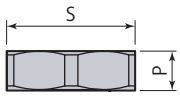

Hex nut for arm mount

- Hex nut for arm mount is included.
- Refer to **page →34** for the details of perfect nut.
- Clamp arm, positioning pin and mounting screws are not included.

mm

Model	CTT01-□	CTT02-□	CTT04-□	CTT06-□	CTT10-□	CTT16-□	CTT25-□
A	129	136	161.5	178.5	203.5	231.5	284
B	38	45	50	57	70	86	108
C	48	55	60	66	82	96	120
D	29	32.5	35	37.5	47	53	66
E	19	22.5	25	28.5	35	43	54
F	30.5	35	40	46	56	68	88
øG	35	39	47	53	63	78	100
G1 (width across flats)	24	30	36	41	50	60	75
øG2	26	33	40	45	55	66	85
øH	14	18	22.4	25	30	35.5	45
J	68.5	77	87.5	92.5	101.5	117.5	147
J1	12	5	13	20	25	30	40
K	60.5	59	74	86	102	114	137
L	28.5	29	31	33	36	40.5	51.5
M	17.5	20	22.5	25.5	28.5	30	37.5
N	22.5	28	34	34	37	47	58
P	6.5	8	9	9	10	12	13
R1	12.5	12.5	12.5	12.5	14	14	21
R2	9	11	12	14	18	22.5	25
R3	22.5	25	28	30.5	36	42	57
R4	8.1	10	11	13	15	19	25
S (nut width across flats)	19	22	27	30	36	46	55
T (hex socket)	5	6	6	8	8	10	14
U	M12×1.5	M14×1.5	M18×1.5	M20×1.5	M24×1.5	M30×1.5	M39×1.5
V	20	19.5	20	20	19.5	20	26
øW	4.3	5.5	5.5	6.8	9	11	14
øX	8	9.5	9.5	11	14	17.5	20
Y1	G1/8	G1/8	G1/8	G1/8	G1/4	G1/4	G3/8
Y2	3.8	3.8	3.8	3.8	4.8	4.8	4.8
øY3	14	14	14	14	19	19	22
Z	R3	R3	R3	R5	R6	R7	R10
øAA (pin groove diameter)	$3^{+0.014}_{0}$	$4^{+0.018}_{0}$	$4^{+0.018}_{0}$	$5^{+0.018}_{0}$	$6^{+0.018}_{0}$	$6^{+0.018}_{0}$	$6^{+0.018}_{0}$
AC	15.5	18.5	19.5	19.5	22.5	24.5	27.5
Positioning pin (dowel pin)	ø3(h8)×8	ø4(h8)×10	ø4(h8)×10	ø5(h8)×10	ø6(h8)×12	ø6(h8)×12	ø6(h8)×14
O-ring (fluorocarbon hardness Hs90)	P7	P7	P7	P7	P8	P8	P10
Taper sleeve	CTH01-TS	CTH02-TS	CTH04-TS	CTH06-TS	CTH10-TS	CTH16-TS	CTH25-TS
Flow control valve (meter-in)*	VCF01	VCF01	VCF01	VCF01	VCF02	VCF02	VCF03
Air bleeding valve*	VCE01	VCE01	VCE01	VCE01	VCE02	VCE02	VCE03

*: Select the right model of VCF and VCE according to the size of the clamp.

Refer to each page for the details of options.

● Taper sleeve **page →33** ● Flow control valve **page →42** ● Air bleeding valve **page →44**

Mounting details

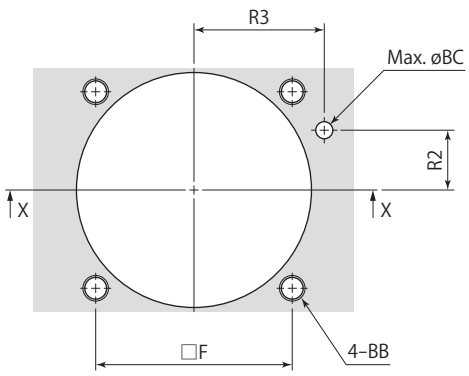

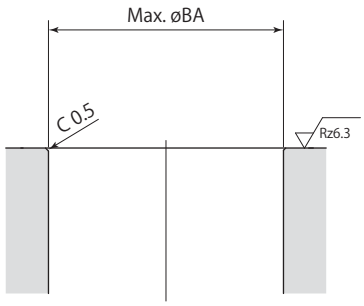

X-X

Rz: ISO4287(1997)

mm

Model	CTT01-□	CTT02-□	CTT04-□	CTT06-□	CTT10-□	CTT16-□	CTT25-□
F	30.5	35	40	46	56	68	88
R2	9	11	12	14	18	22.5	25
R3	22.5	25	28	30.5	36	42	57
øBA	36	40	48	54	64	79	101
BB	M4	M5	M5	M6	M8	M10	M12
øBC	4	4	4	4	6	6	8

CTT — Size: 01, 02, 04, 06, 10, 16, 25

Swing direction (when clamping)

- **L** : Counter-clockwise
- **R** : Clockwise

P : Pin rod

indicates made to order.

Dimensions

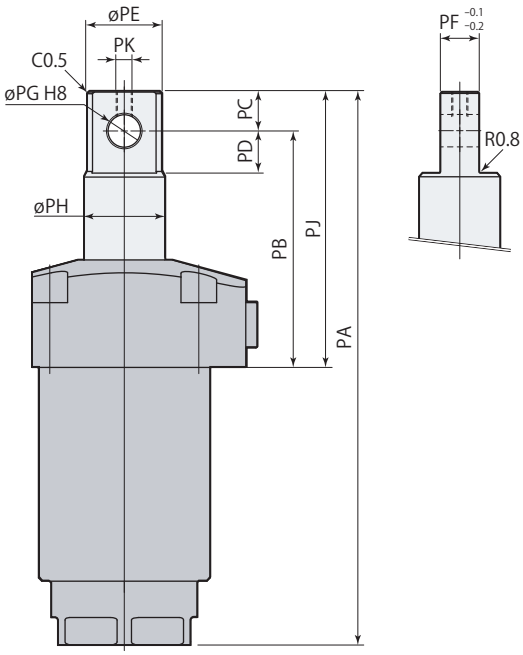

Usage example

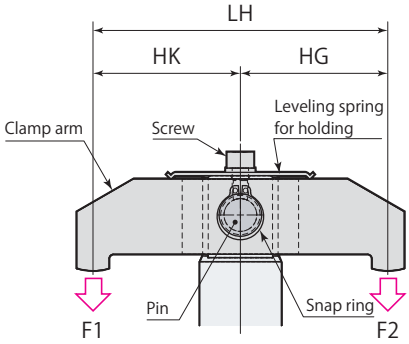

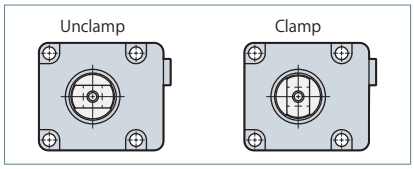

Clamping performance

Clamping force calculation formula
$F1 = \frac{HG}{LH} \times \frac{P\text{-}n1}{n2}$
$F2 = \frac{HK}{LH} \times \frac{P\text{-}n1}{n2}$

F1, F2=Clamping force (kN),
*n*1, *n*2=Coefficient (See diagram on the right),
P= Hydraulic pressure (MPa),
HG, HK=Distance from center of piston to clamping point (mm), LH=(mm)

Model	Coefficient *n1*	Coefficient *n2*
CTT01-□P	1.10	2.97
CTT02-□P	1.16	2.46
CTT04-□P	1.51	1.60
CTT06-□P	1.25	1.12
CTT10-□P	1.26	0.706
CTT16-□P	1.28	0.429
CTT25-□P	1.44	0.271

- This diagram indicates unclamped condition. Direction of pin hole will be hydraulic port side at the time of clamping.
- Clamp arm, pin and snap ring are not included. Customers must arrange for them.
- Thread at top portion of the rod is for attaching a leveling spring. Screw and leveling spring are not included.
- Refer to specifications (**page →23**), dimensions (**page →26**) for other specifications and dimensions that are not shown in the diagram.

mm

Model	CTT01-□P	CTT02-□P	CTT04-□P	CTT06-□P	CTT10-□P	CTT16-□P	CTT25-□P
PA	125	126.5	150	171	197	225	276.5
PB	56.5	59.5	66	73	81	92	115.5
PC	8	8	10	12	14	19	24
PD	9	9	11	13	15	20	25
øPE	12	16	20.4	23	28	33.5	43
PF	8	8	10	12	16	18	22
øPG	$6^{+0.018}_{0}$	$6^{+0.018}_{0}$	$8^{+0.022}_{0}$	$10^{+0.022}_{0}$	$12^{+0.027}_{0}$	$16^{+0.027}_{0}$	$20^{+0.033}_{0}$
øPH	14	18	22.4	25	30	35.5	45
PJ	64.5	67.5	76	85	95	111	139.5
PK	M3×0.5	M3×0.5	M4×0.7	M5×0.8	M6×1	M6×1	M8×1.25
Mass	0.7 kg	0.8 kg	1.3 kg	1.8 kg	3.0 kg	4.9 kg	9.5 kg

CTT□-□N□	Single acting Swing clamp Swing angle 30°, 45°, 60°	7MPa	Single acting

CTT

Size: 01, 02, 04, 06, 10, 16, 25

—

Swing direction (when clamping)

- L : Counter-clockwise
- R : Clockwise

- N30 : Swing angle 30°
- N45 : Swing angle 45°
- N60 : Swing angle 60°

Swing angle

CTT□-□N30

Swing angle 30°

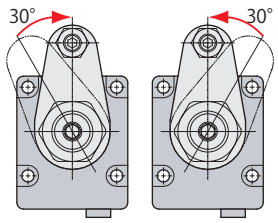

R:Clockwise L:Counter-clockwise

CTT□-□N45

Swing angle 45°

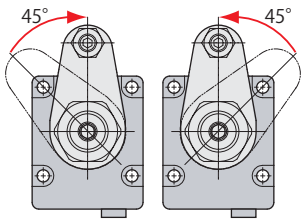

R:Clockwise L:Counter-clockwise

CTT□-□N60

Swing angle 60°

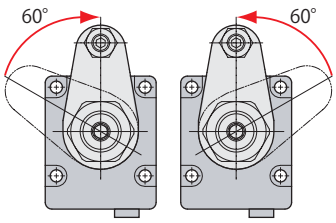

R:Clockwise L:Counter-clockwise

Specifications

Model		CTT01-□N□			CTT02-□N□			CTT04-□N□			CTT06-□N□		
Swing angle		30°±3°	45°±3°	60°±3°	30°±3°	45°±3°	60°±3°	30°±3°	45°±3°	60°±3°	30°±3°	45°±3°	60°±3°
Full stroke	mm	11.8	12.7	13.7	13.0	14.3	15.5	14.3	15.8	17.4	16.8	18.4	20.1
Swing stroke	mm	3.8	4.7	5.7	5.0	6.3	7.5	6.3	7.8	9.4	6.8	8.4	10.1
Clamp stroke	mm	8			8			8			10		
Cylinder capacity (clamp)	cm^3	4.0	4.3	4.6	5.3	5.8	6.3	8.9	9.9	10.8	15.0	16.5	18.0
Return spring force (unclamp)	kN	0.28	0.27	0.26	0.36	0.34	0.32	0.66	0.62	0.58	0.88	0.85	0.81

Model		CTT10-□N□			CTT16-□N□			CTT25-□N□		
Swing angle		30°±3°	45°±3°	60°±3°	30°±3°	45°±3°	60°±3°	30°±3°	45°±3°	60°±3°
Full stroke	mm	18.3	20.3	22.4	19.3	21.6	23.9	24.5	27.4	30.3
Swing stroke	mm	8.3	10.3	12.4	9.3	11.6	13.9	11.5	14.4	17.3
Clamp stroke	mm	10			10			13		
Cylinder capacity (clamp)	cm^3	25.9	28.8	31.7	44.8	50.2	55.6	90.4	101.0	111.6
Return spring force (unclamp)	kN	1.38	1.32	1.25	2.26	2.15	2.03	3.86	3.62	3.39

Refer to **page →23** for specifications of products that are not listed on this page.

Dimensions

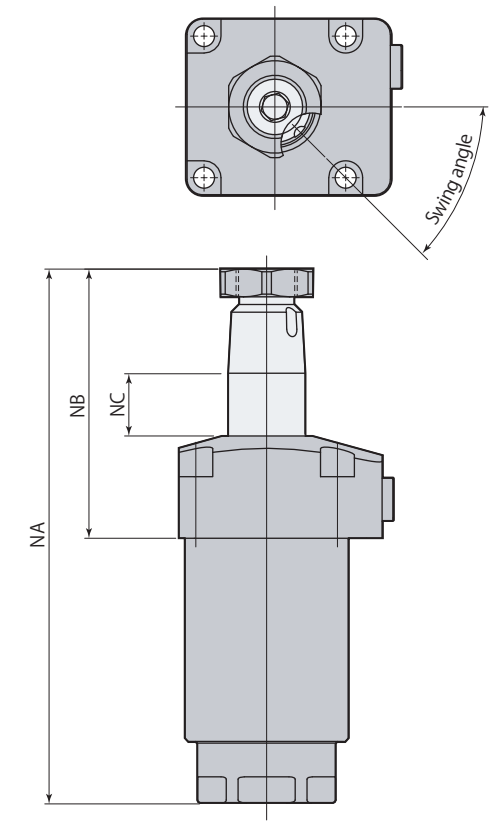

Swing direction L
(counter-clockwise)

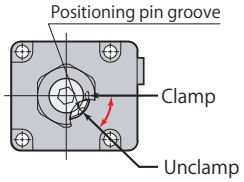

Swing direction R
(clockwise)

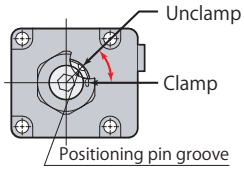

- This diagram indicates unclamped condition of swing direction L (L stands for counter-clockwise).
  Direction of positioning pin groove will be hydraulic port side at the time of clamping.
- Refer to dimensions (**page →26**) for dimensions of products that are not listed on this page.

mm

Model	CTT01-□N□			CTT02-□N□			CTT04-□N□			CTT06-□N□		
Swing angle	30°±3°	45°±3°	60°±3°	30°±3°	45°±3°	60°±3°	30°±3°	45°±3°	60°±3°	30°±3°	45°±3°	60°±3°
NA	124.8	125.7	126.7	131.0	132.3	133.5	155.3	156.8	158.4	171.8	173.4	175.1
NB	64.3	65.2	66.2	72.0	73.3	74.5	81.3	82.8	84.4	85.8	87.4	89.1
NC	13.3	14.2	15.2	15.0	16.3	17.5	16.3	17.8	19.4	18.8	20.4	22.1

mm

Model	CTT10-□N□			CTT16-□N□			CTT25-□N□		
Swing angle	30°±3°	45°±3°	60°±3°	30°±3°	45°±3°	60°±3°	30°±3°	45°±3°	60°±3°
NA	195.3	197.3	199.4	222.3	224.6	226.9	272.5	275.4	278.3
NB	93.3	95.3	97.4	108.3	110.6	112.9	135.5	138.4	141.3
NC	20.3	22.3	24.4	20.8	23.1	25.4	26.0	28.9	31.8

Clamp arm mounting details

Clamp arm is not included. Manufacture a clamp arm with the dimensions shown in the table below.

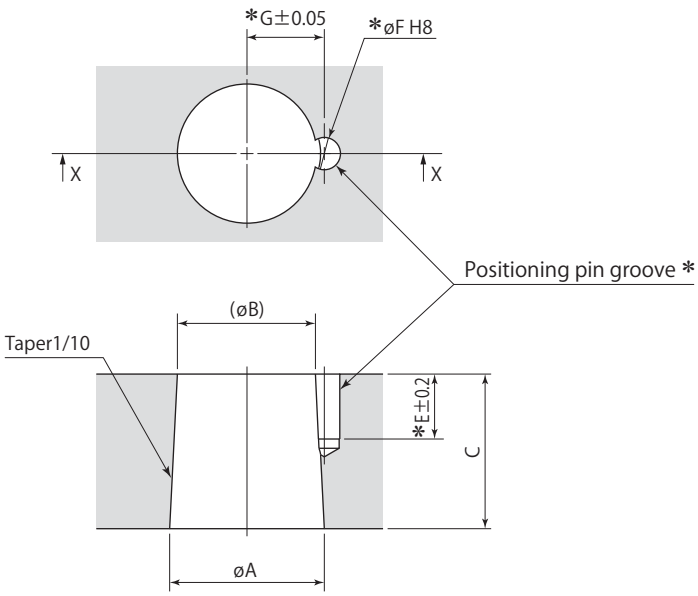

X-X

*: No need to machine the pin groove (E, øF, G) unless positioning pin is used for the arm.
The positioning pin enables a clamp arm to locate on the clamp firmly and easily.

mm

Swing clamp	CTT01	CTT02	CTT04	CTT06	CTT10	CTT16	CTT25
øA	$14^{-0.016}_{-0.034}$	$18^{-0.016}_{-0.034}$	$22.4^{-0.020}_{-0.041}$	$25^{-0.020}_{-0.041}$	$30^{-0.020}_{-0.041}$	$35.5^{-0.025}_{-0.050}$	$45^{-0.025}_{-0.050}$
øB	12.4	16	19.9	22.5	27.3	32	40.5
C	16	20	25	25	27	35	45
E	9	10.5	10.5	10.5	12.5	12.5	14.5
øF (pin groove diameter)	$3^{+0.014}_{0}$	$4^{+0.018}_{0}$	$4^{+0.018}_{0}$	$5^{+0.018}_{0}$	$6^{+0.018}_{0}$	$6^{+0.018}_{0}$	$6^{+0.018}_{0}$
G	7.55	9.1	11.1	12.6	15.1	18.1	22.6

Taper sleeve

Size

CTH 01 / 02 / 04 / 06 / 10 / 16 / 25 — TS : Taper sleeve

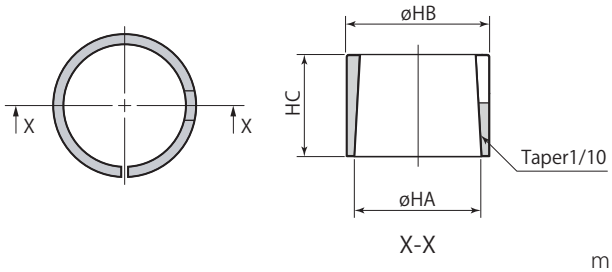

mm

Taper sleeve	CTH01-TS	CTH02-TS	CTH04-TS	CTH06-TS	CTH10-TS	CTH16-TS	CTH25-TS
Applicable swing clamp	CTT01	CTT02	CTT04	CTT06	CTT10	CTT16	CTT25
øHA	14	18	22.4	25	30	35.5	45
øHB	16	20	25	28	34	40	49
HC	13	16	21	20	22	29	38

Clamp arm mounting details

(Using taper sleeve)

Clamp arm is not included. Manufacture a clamp arm with the dimensions shown in the table below.

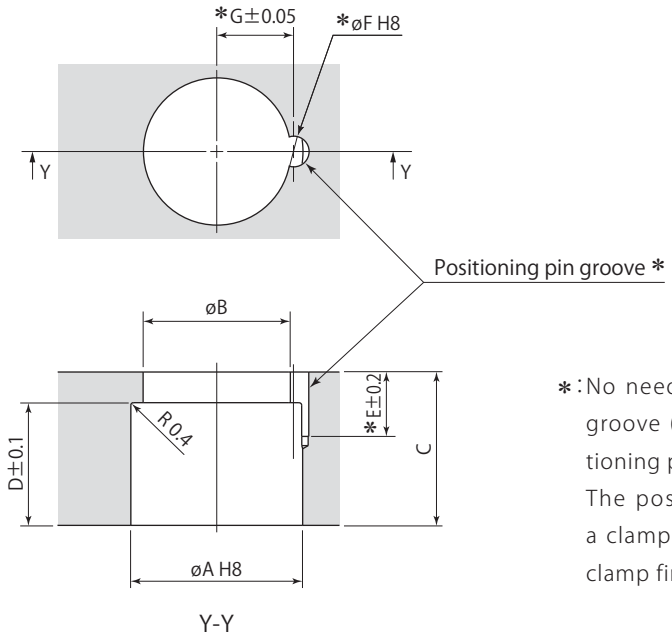

*: No need to machine the pin groove (E, øF, G) unless positioning pin is used for the arm. The positioning pin enables a clamp arm to locate on the clamp firmly and easily.

mm

Taper sleeve	CTH01-TS	CTH02-TS	CTH04-TS	CTH06-TS	CTH10-TS	CTH16-TS	CTH25-TS
Applicable swing clamp	CTT01	CTT02	CTT04	CTT06	CTT10	CTT16	CTT25
øA	$16^{+0.027}_{0}$	$20^{+0.033}_{0}$	$25^{+0.033}_{0}$	$28^{+0.033}_{0}$	$34^{+0.039}_{0}$	$40^{+0.039}_{0}$	$49^{+0.039}_{0}$
øB	13	17	21	24	28.5	34	42
C	16	20	25	25	27	35	45
D	13	16	21	20	22	29	38
E	9	10.5	10.5	10.5	12.5	12.5	14.5
øF (pin groove diameter)	$3^{+0.014}_{0}$	$4^{+0.018}_{0}$	$4^{+0.018}_{0}$	$5^{+0.018}_{0}$	$6^{+0.018}_{0}$	$6^{+0.018}_{0}$	$6^{+0.018}_{0}$
G	7.55	9.1	11.1	12.6	15.1	18.1	22.6