Control unit model **HCT-□**

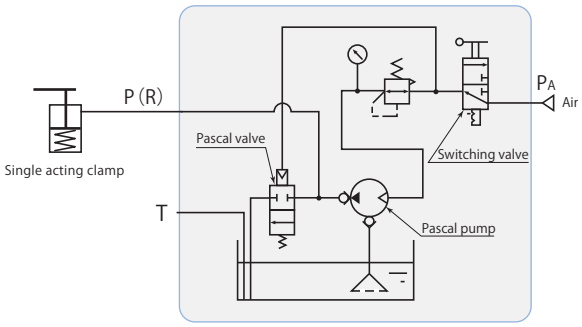

Compact hydraulic control unit for air drive and manual operations. Pascal pump stops pumping once circuit pressure has been attained and retains the pressure. Furthermore, since there is hardly any temperature fluctuation of working fluid, there is no need for any auxiliary pressure equipment.

Model		HCT-2	HCT-3
Pascal pump		X6308-HCK-C	X6310-HCK-C
Discharge oil pressure*1	MPa	8.7–26.1	5.55–16.65
Set air pressure	MPa	0.2–0.5	
Unloaded oil discharge amount	L/min	Refer to **page → 165** for performance diagram.	
Tank capacity*2	L	H.L. 1.5 L.L. 0.6	
Operating temperature	°C	5–60	
Fluid used		General mineral based hydraulic oil (ISO-VG32 equivalent)	
Mass	kg	8.3	

*1: Ask for consultation on specifications that exceed discharge oil pressure range.

*2: Oil level in the tank should be always between H.L. and L.L. of the gauge.

Dimensions
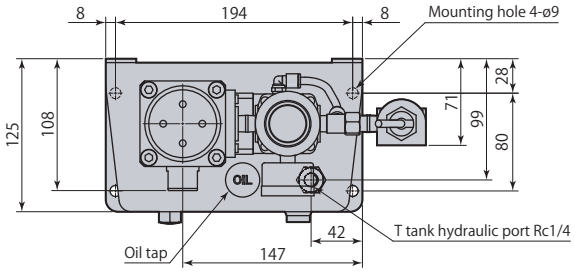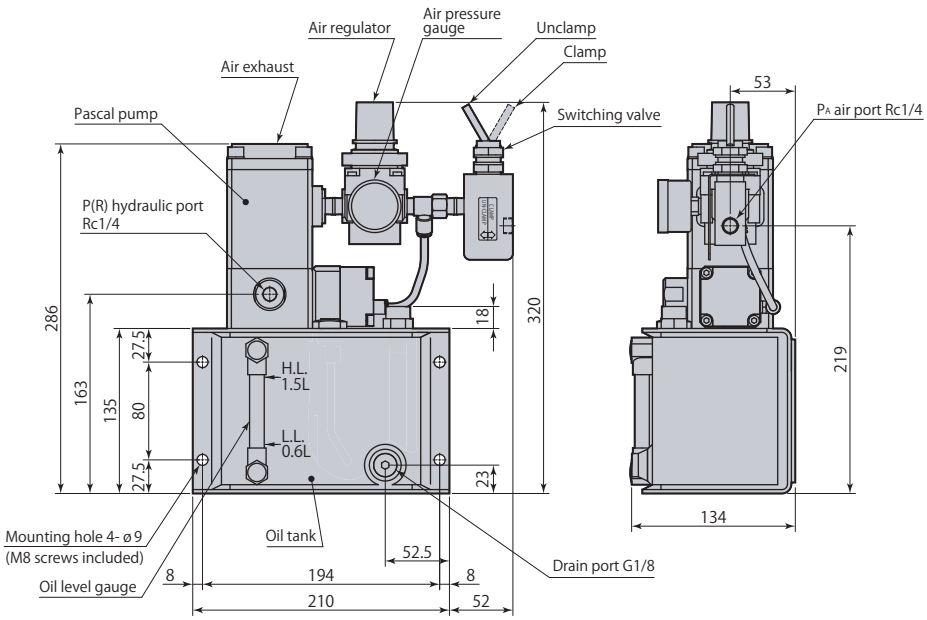
HCT-□ Single acting circuit control unit