# Power unit

# model HUD

Data sheet

Pascal

www.pascaleng.co.jp

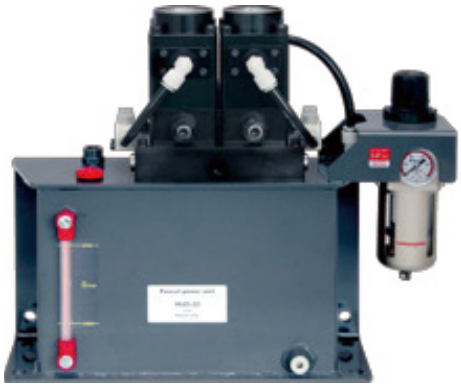

## Model designation

**HUD－22**

### Specifications

| Model | | HUD-22 |
|---|---|---|
| Number of pumps | | 2 |
| Discharge pressure | MPa | 24.5 |
| Driving air pressure | MPa | 0.47 |
| Discharge volume（at no load） | L /min | 2.6 |
| Oil tank capacity | L | HIGH-LEVEL：4.8 ／ LOW-LEVEL：1.9 |
| Air consumption rate | $Nm^3$/min | Max. 0.8 |
| Weight（without oil） | kg | 22 |

- Fluid used：General mineral based hydraulic oil（ISO-VG32 equivalent）
- Operating temperature：0 ～ 60℃（No frozen）

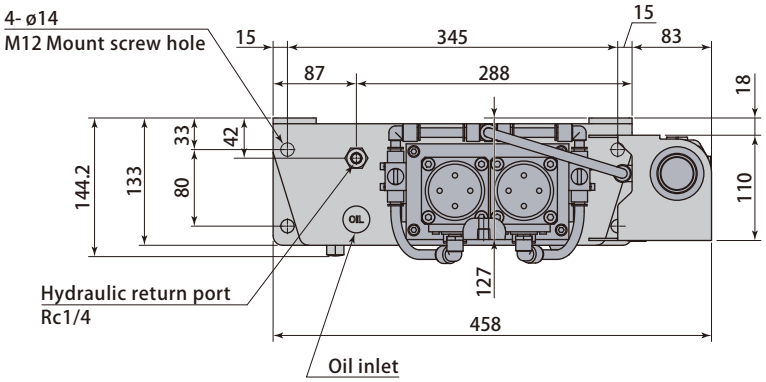


Circuit diagram

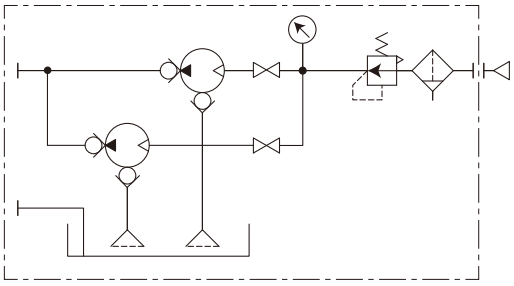

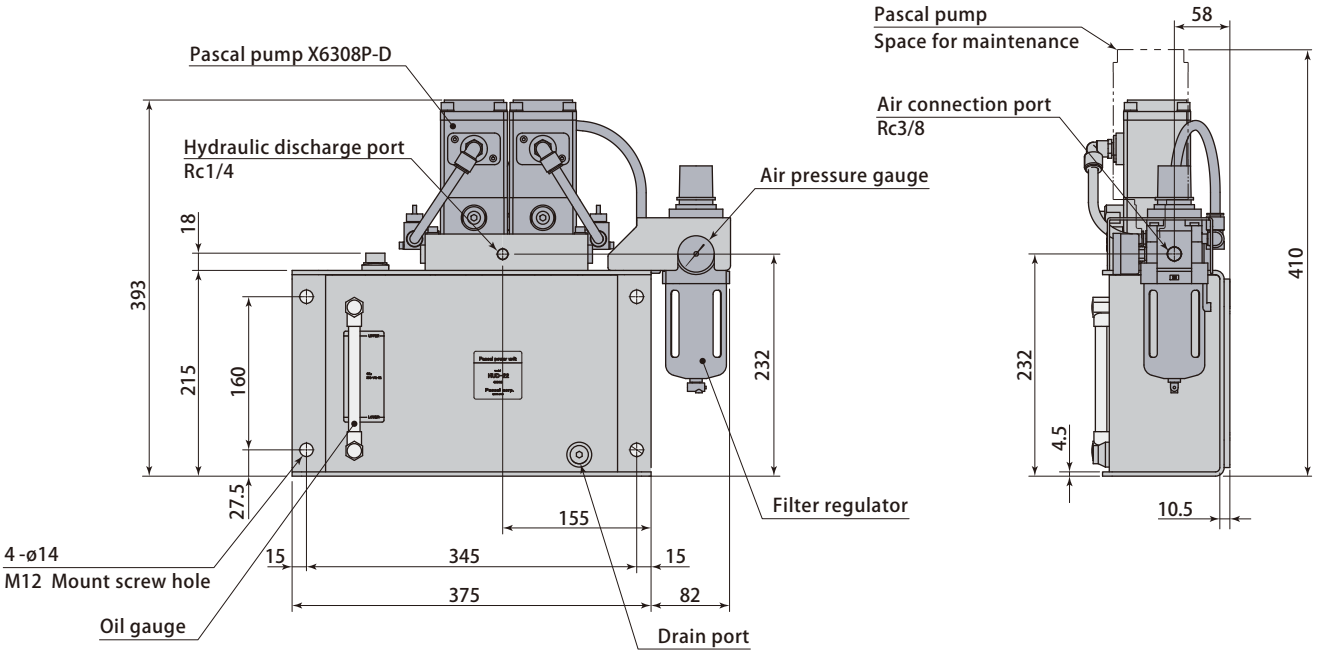

# A C Circuit

( C = A + B Circuit )

| Number of hydraulic circuits | | |
|---|---|---|
| Upper clamp | Lower clamp | Die-lifter |
| 1 | 1 | 1 |

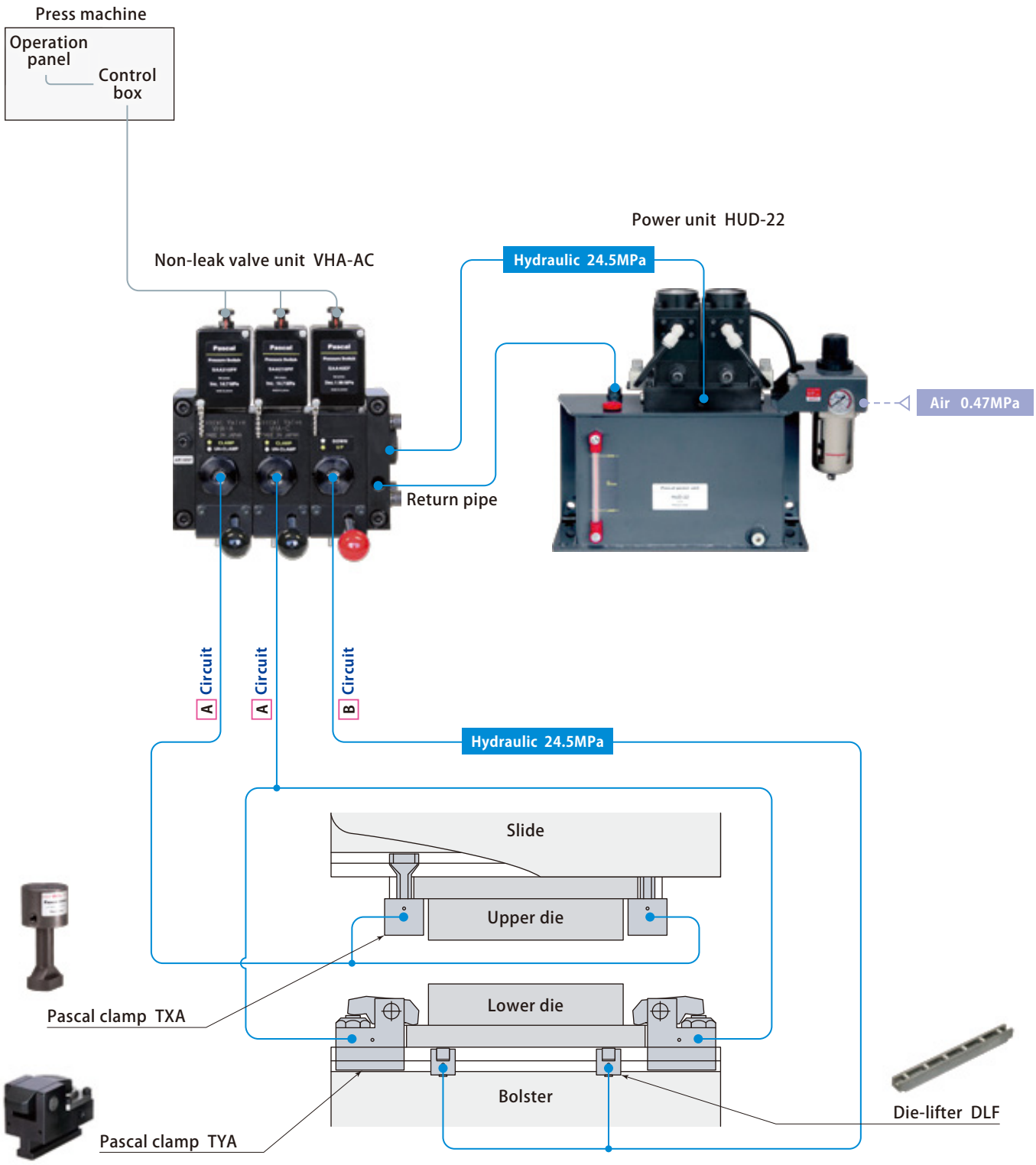

Pascal
corporation

Itami, Hyogo, Japan 664-8502
TEL. 072-777-3333 FAX. 072-777-3520

CERTIFICATE OF APPROVAL ISO9001

PA-497E REV.0 2016.9
Specifications are subject to change without prior notice.